3 611 B69 0K0
Issue / Stand 13-09-19

Fig./Abb. 1

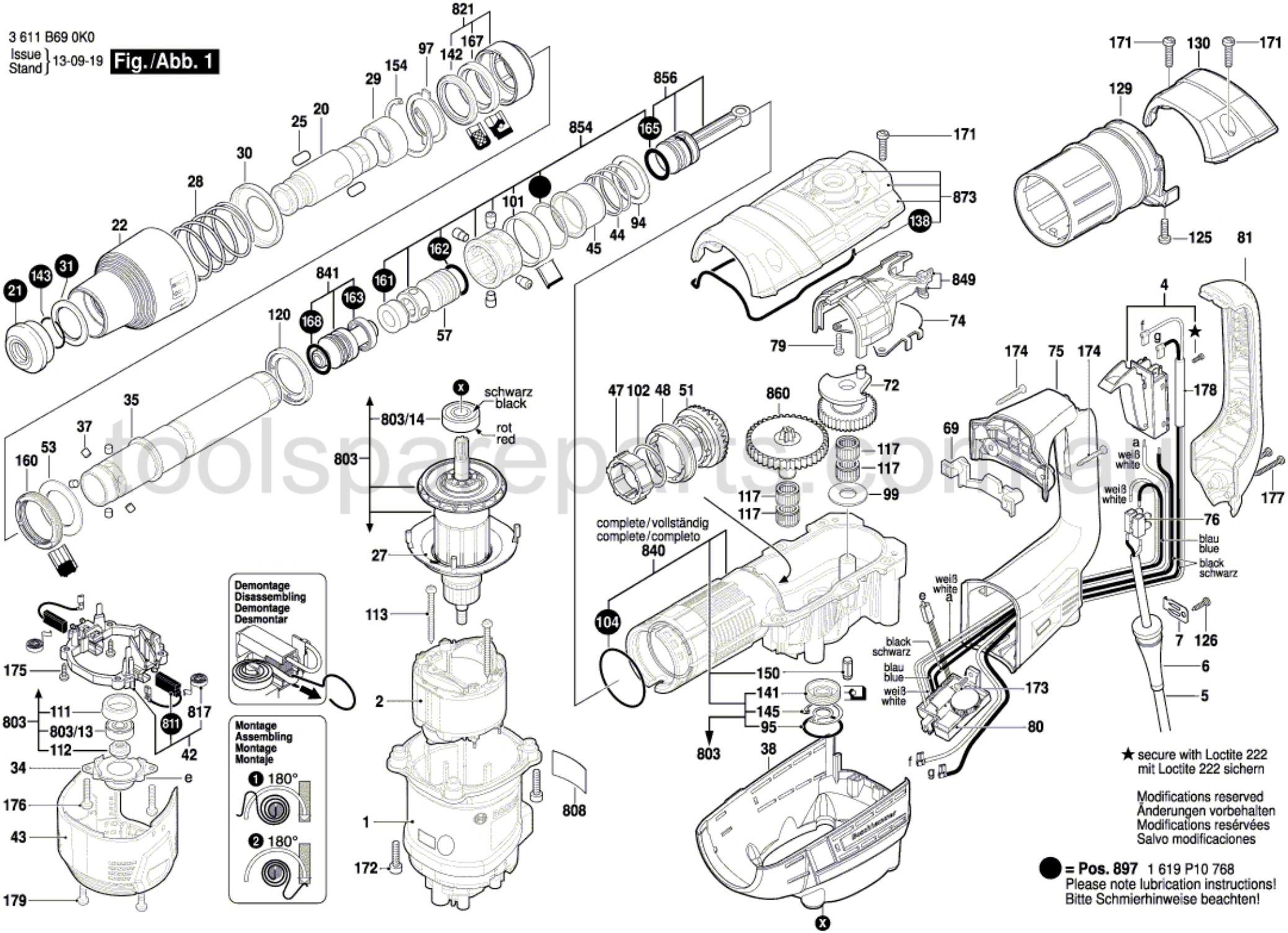

toolspareparts.com